MJOLNIR SPACEWORKS

Transforming Space Mobility

Weldless tanks introduction

Copyright © MJOLNIR SPACEWORKS Co., Ltd

Weldless tank architecture

Seamless fabrication

- No welding or joined shell assembly
- Lower manufacturing cost and shorter lead times

Consistent quality

- Eliminates weld-related variability
- Stable, repeatable quality across all units

From development to scale

- Design flexibility to meet performance and geometry requirements
- Support from single-unit builds to full production runs
- Proven designs ready for reliable mass production

Copyright © MJOLNIR SPACEWORKS Co., Ltd

System Integration

Guaranteed function and performance

- Design can be compliant with various public standards
- Manufacturing performed in an ISO 9001–certified facility
- Testing and inspections available to meet customer-specific requirements

Interface & peripheral design

- Design and manufacturing of tank bases, mounts, plugs and interfaces
- Developed to meet system IF requirements
- Delivered as an integrated structure, including all peripheral components

Copyright © MJOLNIR SPACEWORKS Co., Ltd

Technological Developments

Weight reduction

Through thin-wall processing
we can manufacture the world`s lightest tanks / COPV

Internal devices

Developing anti-sloshing and liquid guidance devices under low gravity

Complete systems

Design and manufacturing of complete tank systems, including mounts and plugs

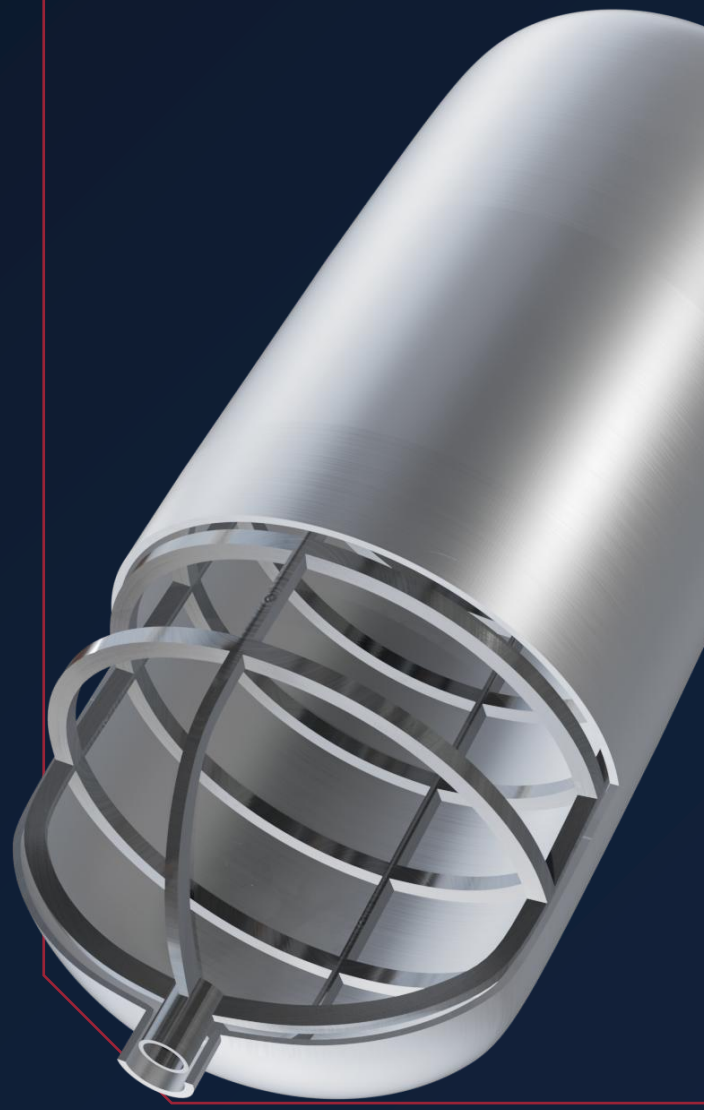

Copyright © MJOLNIR SPACEWORKS Co., Ltd

Optimisation
Research

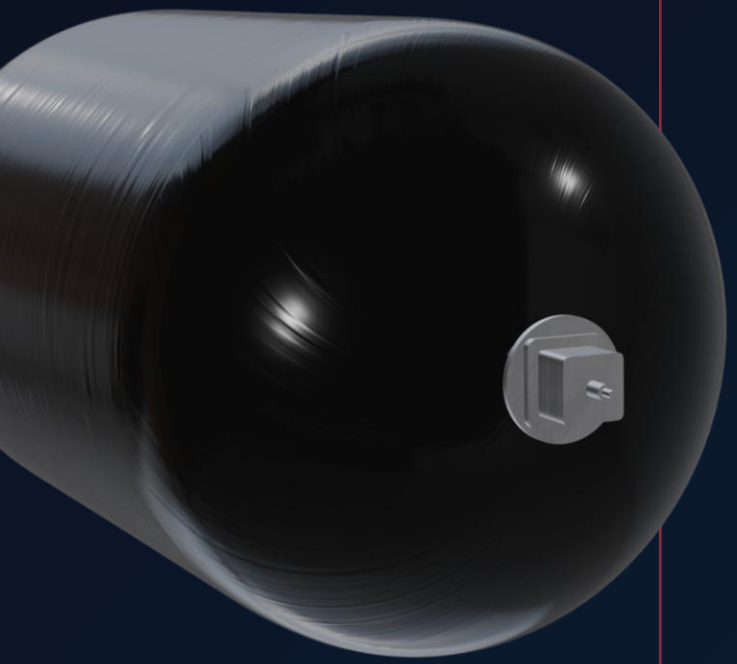

Further weight reduction

We conduct research aiming at further reduction of COPV tank mass to create the lightest tank ever made

Further lead time reduction

The research covers design and production process optimisations to reduce lead time by 50%

Further price reduction

We aim at further price reduction to deliver even more competitive products

Copyright © MJOLNIR SPACEWORKS Co., Ltd

Standard Manufacturing

During the standard manufacturing process, the client must design a complete tank system themselves.
In a welded tank manufacturing process, all welding-related fabrication and testing procedures must be performed on every unit produced. This considerably prolongs production time and delays delivery.

Copyright © MJOLNIR SPACEWORKS Co., Ltd

MSW Manufacturing

During the MSW manufacturing process, the client can provide high-level requirements and MSW will design, manufacture and test a complete and custom-fit tank system.
Weldless process allows MSW to conduct all necessary qualification tests on a prototype unit only, which considerably shortens production time and ensures much faster delivery.

Copyright © MJOLNIR SPACEWORKS Co., Ltd

Bespoke solutions

Shapes and Sizes (Other sizes possible)
Cylindrical: D150-544 × W500-5000 mm
Oval: D400 × W415 mm

Materials
Aluminum, Aluminum(+CFRP), Stainless Steel, Titanium

Maximum expected operating pressure
40 MPa+

Inspection and Testing
Pressure, Airtightness, Burst, Temperature Cycle, Vibration, Impact, etc.

Lead Time
Product: ~6 months - Development: ~1 year

Price
Starting from ~60,000 USD for the tank excluding extras (tests, mount, plugs, shipping etc.)

example of COPV tank

Copyright © MJOLNIR SPACEWORKS Co., Ltd

Example of Development 1

Size
~ D430 × W955 mm

Materials
Aluminum+CFRP

MEOP
~ 35 MPa

Capacity
~ 100 L

Weight
~ 30 kg

Fluid
He

Parts
Plugs

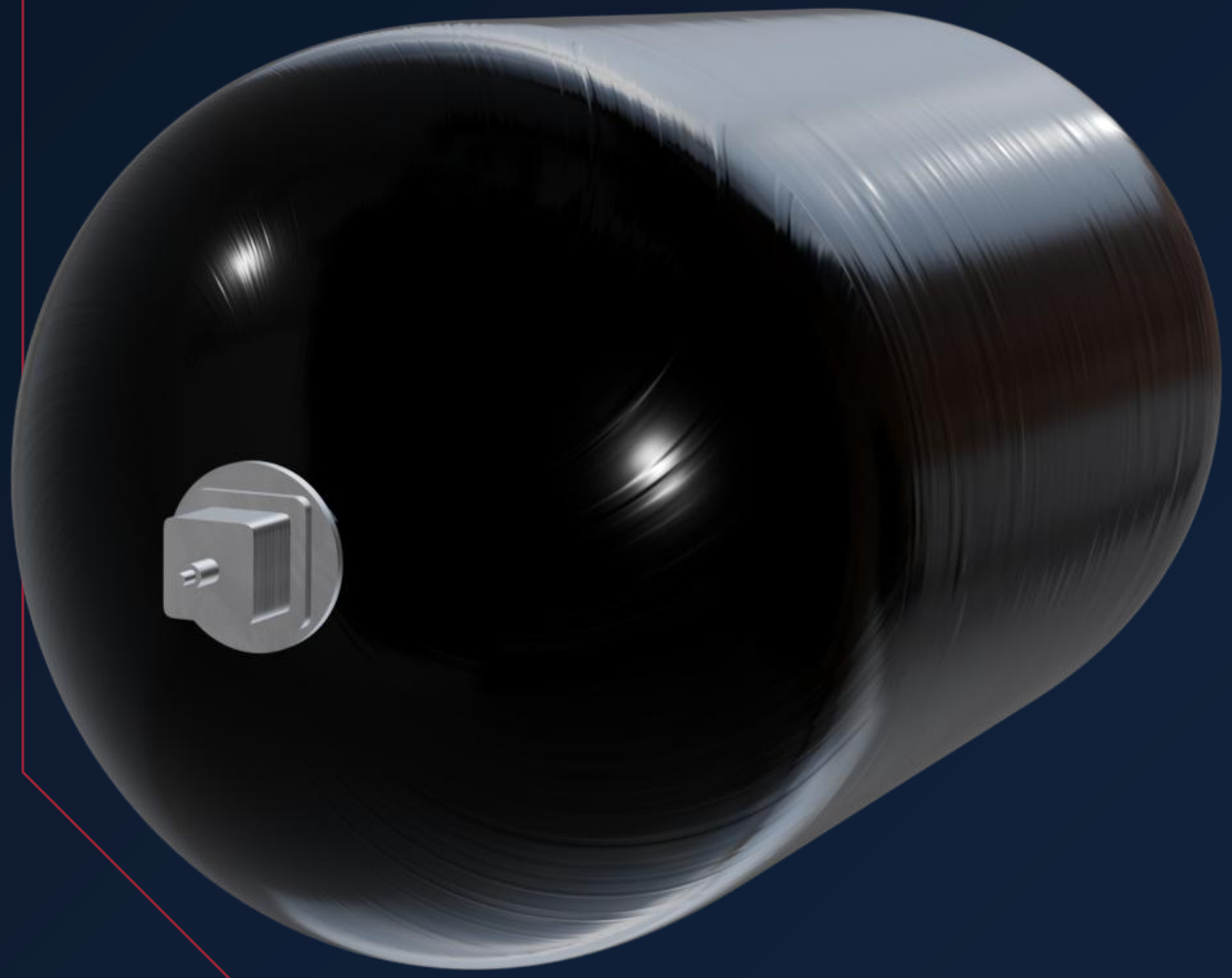

Copyright © MJOLNIR SPACEWORKS Co., Ltd

Example of Development 2

Size
~ D335 × W565 mm

Materials
Aluminum+CFRP

MEOP
~20 MPa

Capacity
~30 L

Weight
~10 kg, ~18 kg with parts

Fluid
Gas

Parts
Mounts, Plugs

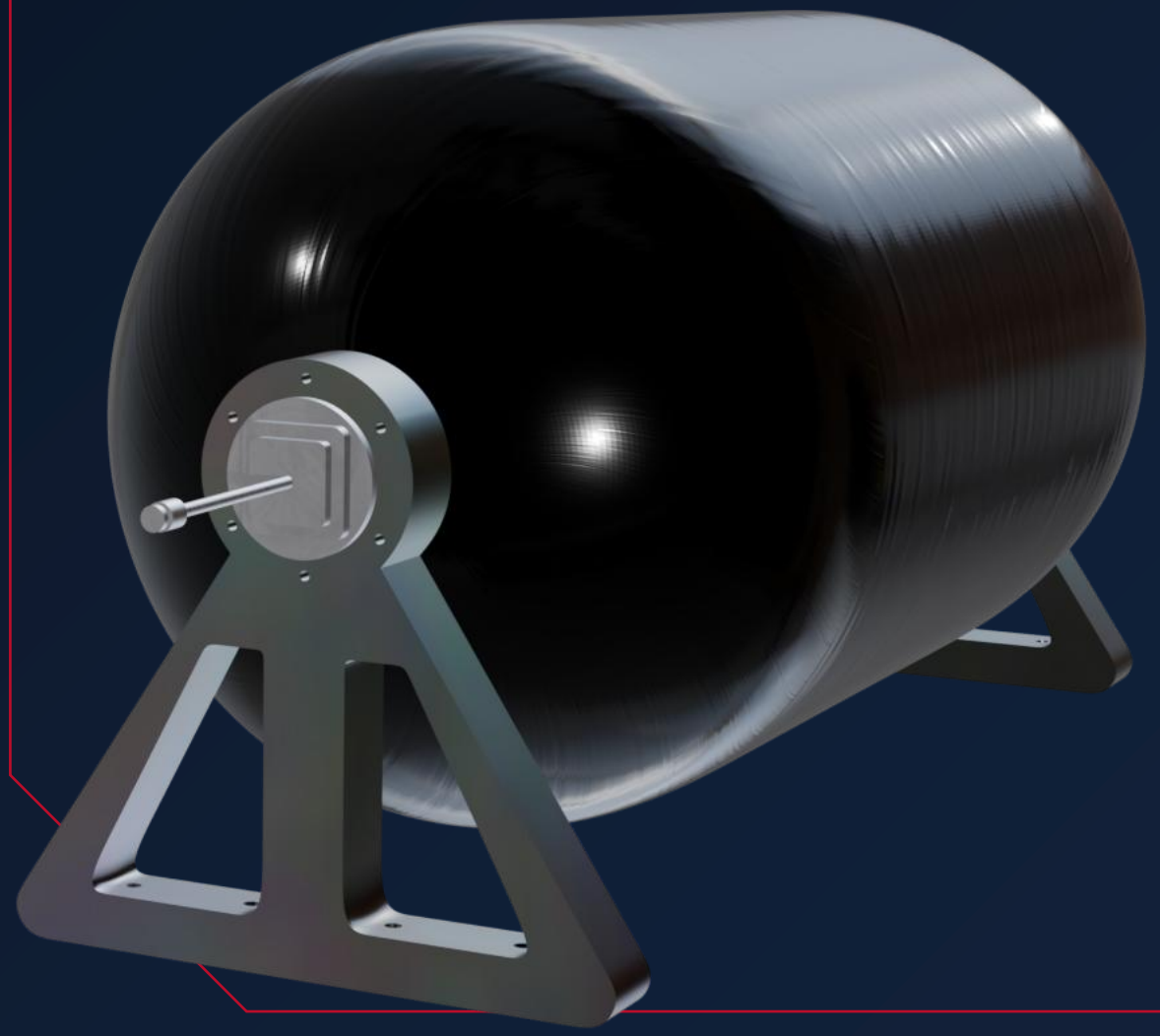

Copyright © MJOLNIR SPACEWORKS Co., Ltd

Example of Development 3

Size
~ D400 × W420 mm

Materials
Aluminum

MEOP
~7 MPa

Capacity
~25 L

Weight
~10 kg

Fluid
LOX

Parts
Threaded Flange

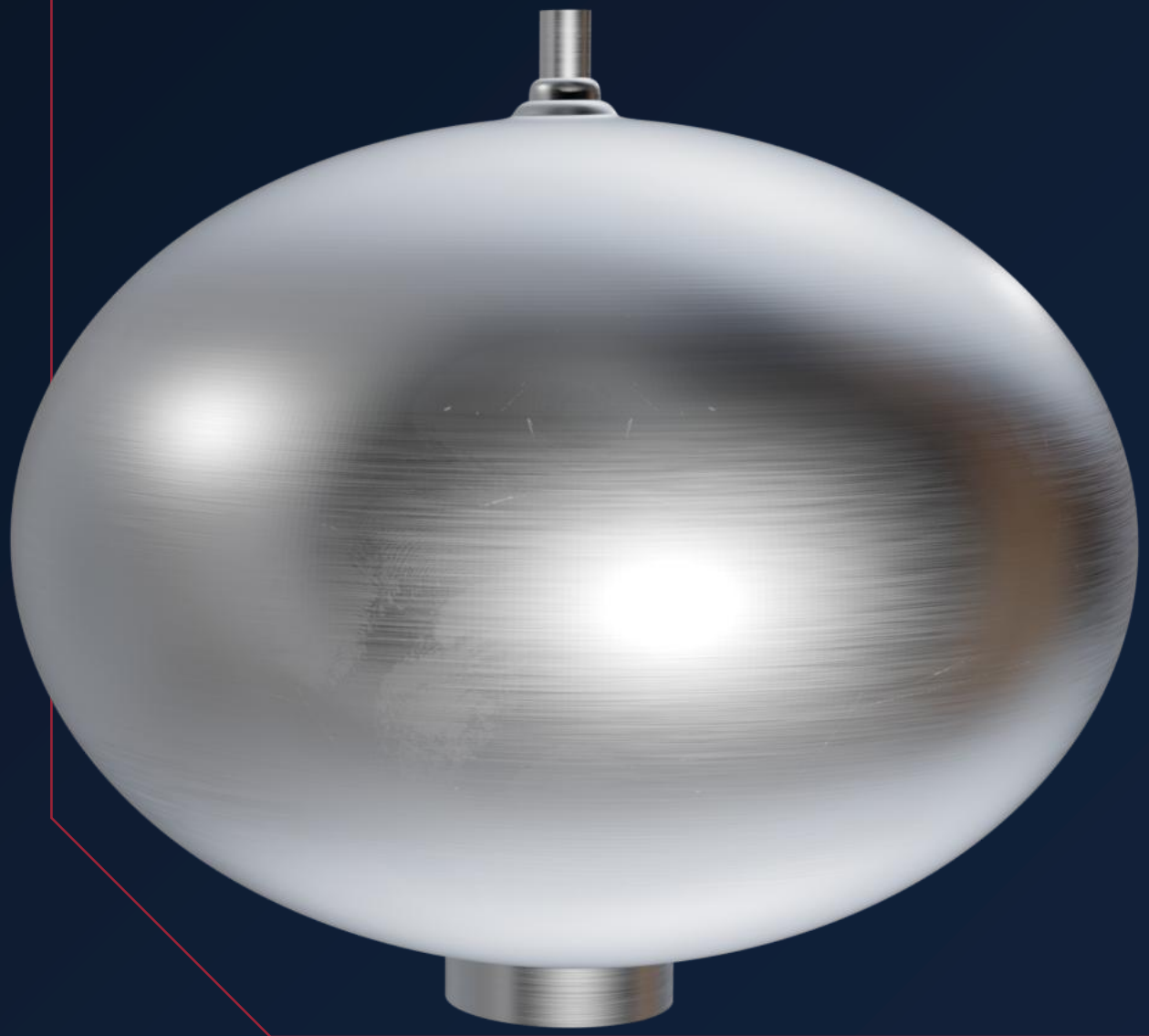

Copyright © MJOLNIR SPACEWORKS Co., Ltd

Example of Development 4

Size
~ D420 × W1700 mm

Materials
Aluminum

MEOP
~5 MPa

Capacity
~200 L

Weight
~30 kg

Fluid
LOX

Parts
Threaded Flange

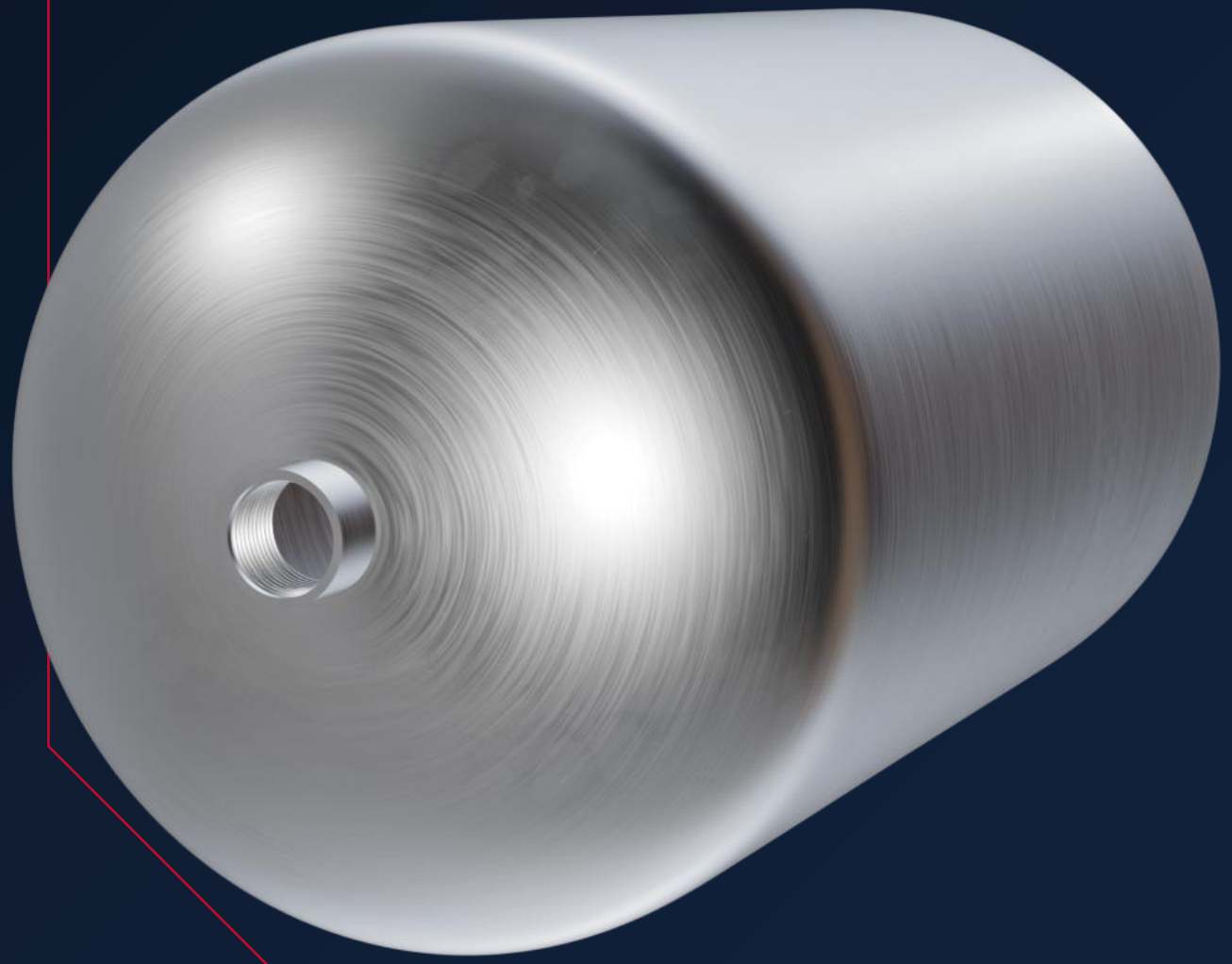

Copyright © MJOLNIR SPACEWORKS Co., Ltd

Example of Development 5

Size
~ D400 × W1000 mm

Materials
Aluminum

MEOP
~10 MPa

Capacity
~100 L

Weight
~30 kg

Fluid
LOX

Parts
Threaded Flange

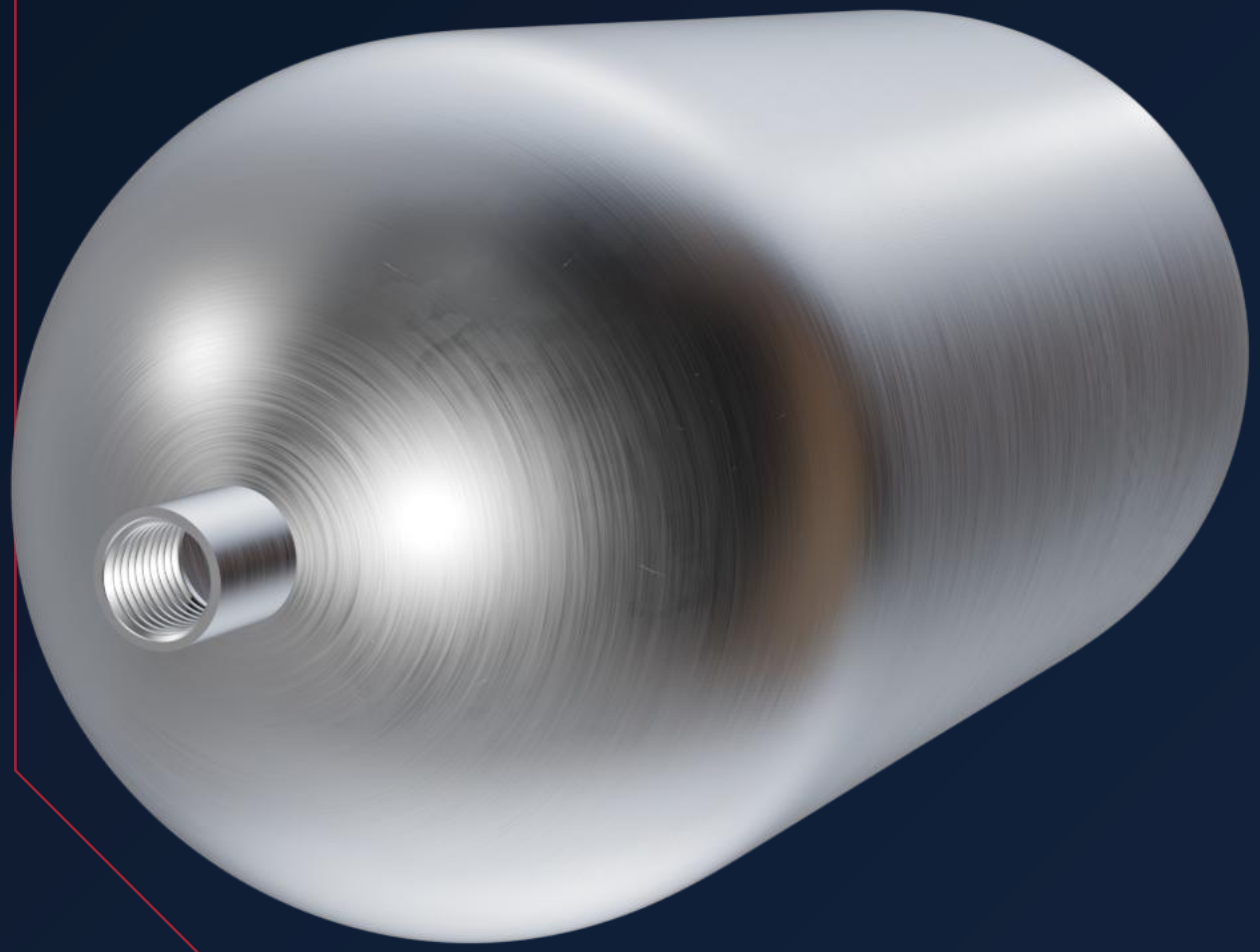

Copyright © MJOLNIR SPACEWORKS Co., Ltd

MJOLNIR
SPACEWORKS

Get in touch Today

Homepage

Contact

X

YouTube

Copyright © MJOLNIR SPACEWORKS Co., Ltd